SIEMENS

Data sheet 3VL9600-3MQ00

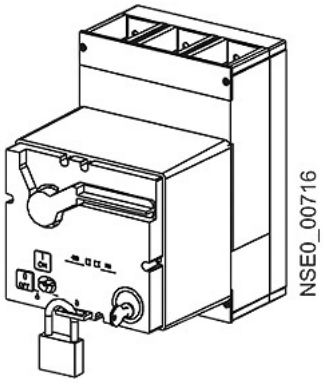

accessory for VL630, VL800, mot. op. mech. w/ strd en. mech 220...250V AC/DC

Model	
product brand name	SENTRON
product designation	Motorized operating mechanism with stored energy mechanism
design of the product	Accessories for VL630; VL800
type of the driving mechanism	Motorized operating mechanism with spring energy store
General technical data	
break time / typical	5 s
operating frequency / maximum	60 1/h
Voltage	
fuse protection type / for external auxiliary power supply / required	NEOZED fuse (gL/gG): 2 A / miniature circuit breaker, C char.: 2 A
operating range factor control supply voltage rated value	
• at DC / initial value	0.85
• at DC / full-scale value	1.1
• at AC / at 50 Hz / initial value	0.85
• at AC / at 50 Hz / full-scale value	1.1
• at AC / at 60 Hz / initial value	0.85
• at AC / at 60 Hz / full-scale value	1.1
Protection class	
protection class IP	IP30
Current	
make time / typical	0.1 s
Control current	
operating apparent power	250 V·A
control supply voltage	
• at DC / rated value / minimum	250 V
• at DC / rated value / maximum	220 V
• at AC / at 50 Hz / rated value / minimum	220 V
• at AC / at 50 Hz / rated value / maximum	250 V
• at AC / at 60 Hz / rated value / minimum	220 V
• at AC / at 60 Hz / rated value / maximum	250 V
Accessories	
accessories	Accessories for VL630; VL800
pulse duration / minimum	50 ms
Connections	
stripped length	10 mm
connectable conductor cross-section / solid	

Subject to change without notice
© Copyright Siemens

● minimum	0.75 mm²
● maximum	1.5 mm²
connectable conductor cross-section / stranded	
● minimum	0.75 mm²
● maximum	1.5 mm²
connectable conductor cross-section / finely stranded / with core end processing	
● minimum	0.75 mm²
● maximum	1.5 mm²
tightening torque	
● maximum	1 N·m
Mechanical Design	
height	190 mm
width	173 mm
depth	160 mm
net weight	5 639 g
Environmental conditions	
ambient temperature / during operation	
● minimum	-25 °C
● maximum	70 °C
ambient temperature / during storage	
● minimum	-40 °C
● maximum	80 °C
Certificates	
reference code	
● acc. to DIN EN 61346-2	M
● acc. to IEC 81346-2	M

General Product Approval	EMC	Declaration of Conformity	Test Certificates	Marine / Shipping
Miscellaneous			Special Test Certificate	

Marine / Shipping			other		
PRS	RINA	RMRS	Miscellaneous	Environmental Confirmations	Manufacturer Declaration

other
Confirmation

Further information

Information- and Downloadcenter (Catalogs, Brochures,…)
http://www.siemens.com/lowvoltage/catalogs
Industry Mall (Online ordering system)
https://mall.industry.siemens.com/mall/en/en/Catalog/product?mlfb=3VL9600-3MQ00
Service&Support (Manuals, Certificates, Characteristics, FAQs,...)
https://support.industry.siemens.com/cs/ww/en/ps/3VL9600-3MQ00
Image database (product images, 2D dimension drawings, 3D models, device circuit diagrams, ...)

Subject to change without notice
© Copyright Siemens

http://www.automation.siemens.com/bilddb/cax_en.aspx?mlfb=3VL9600-3MQ00

CAx-Online-Generator

http://www.siemens.com/cax

Tender specifications

http://www.siemens.com/specifications

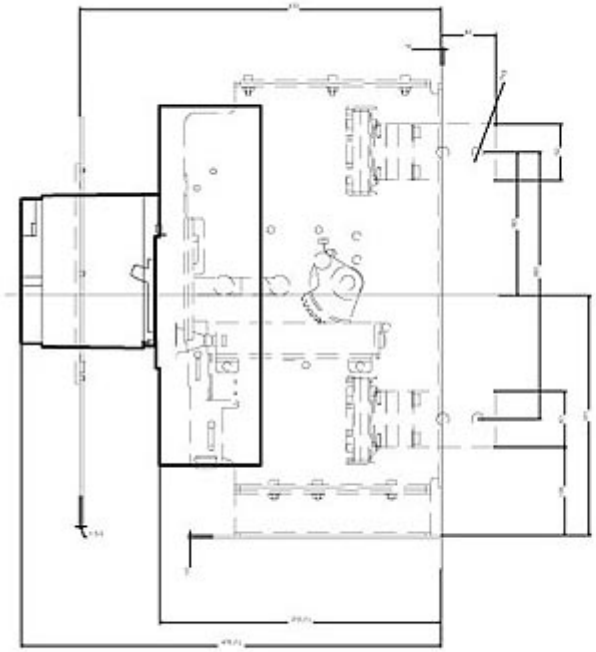

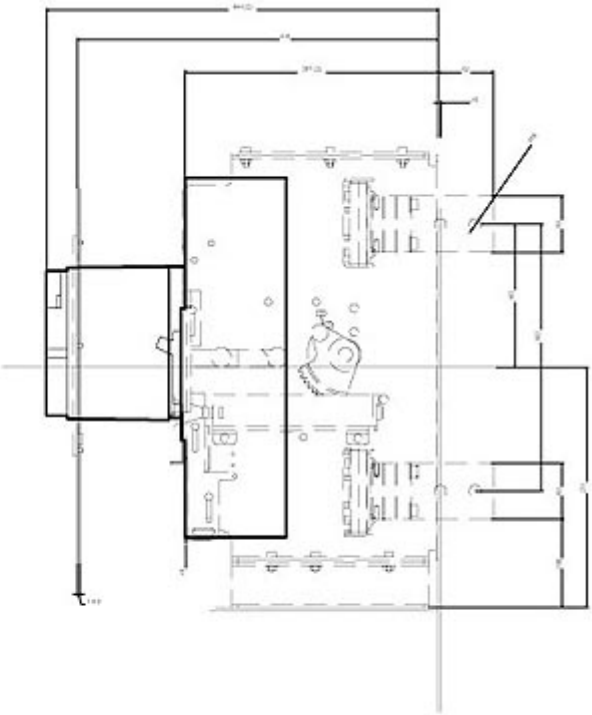

(1) Ausgefahren
(2) Eingefahren

Subject to change without notice
© Copyright Siemens